REVISION HISTORY			
REV.	DESCRIPTION	DATE	APPROVED
D	DCN 51793	07/22	SEE PDM

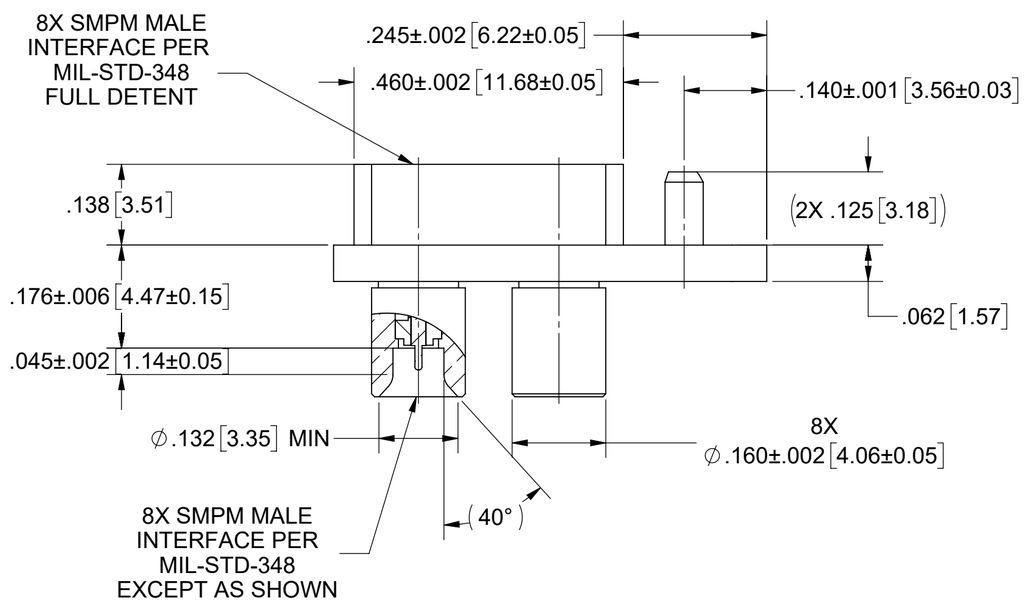

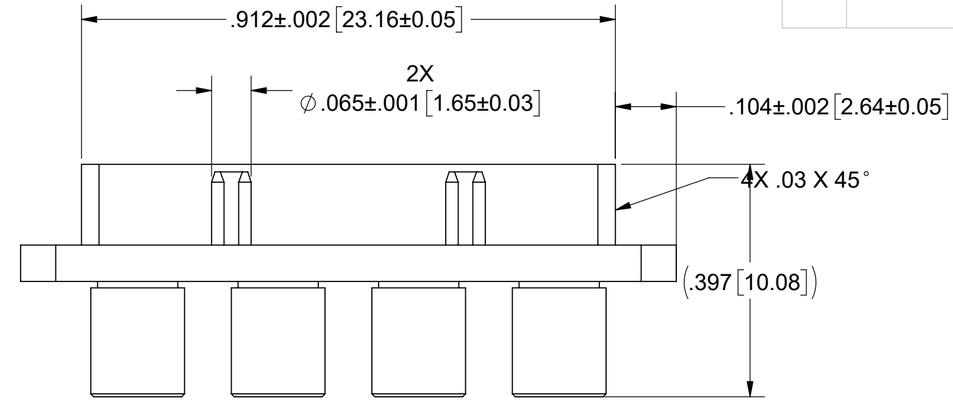

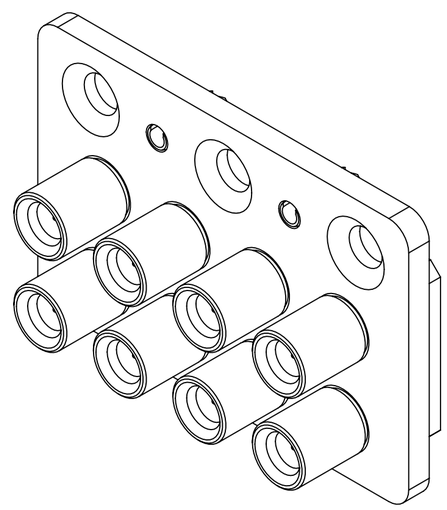

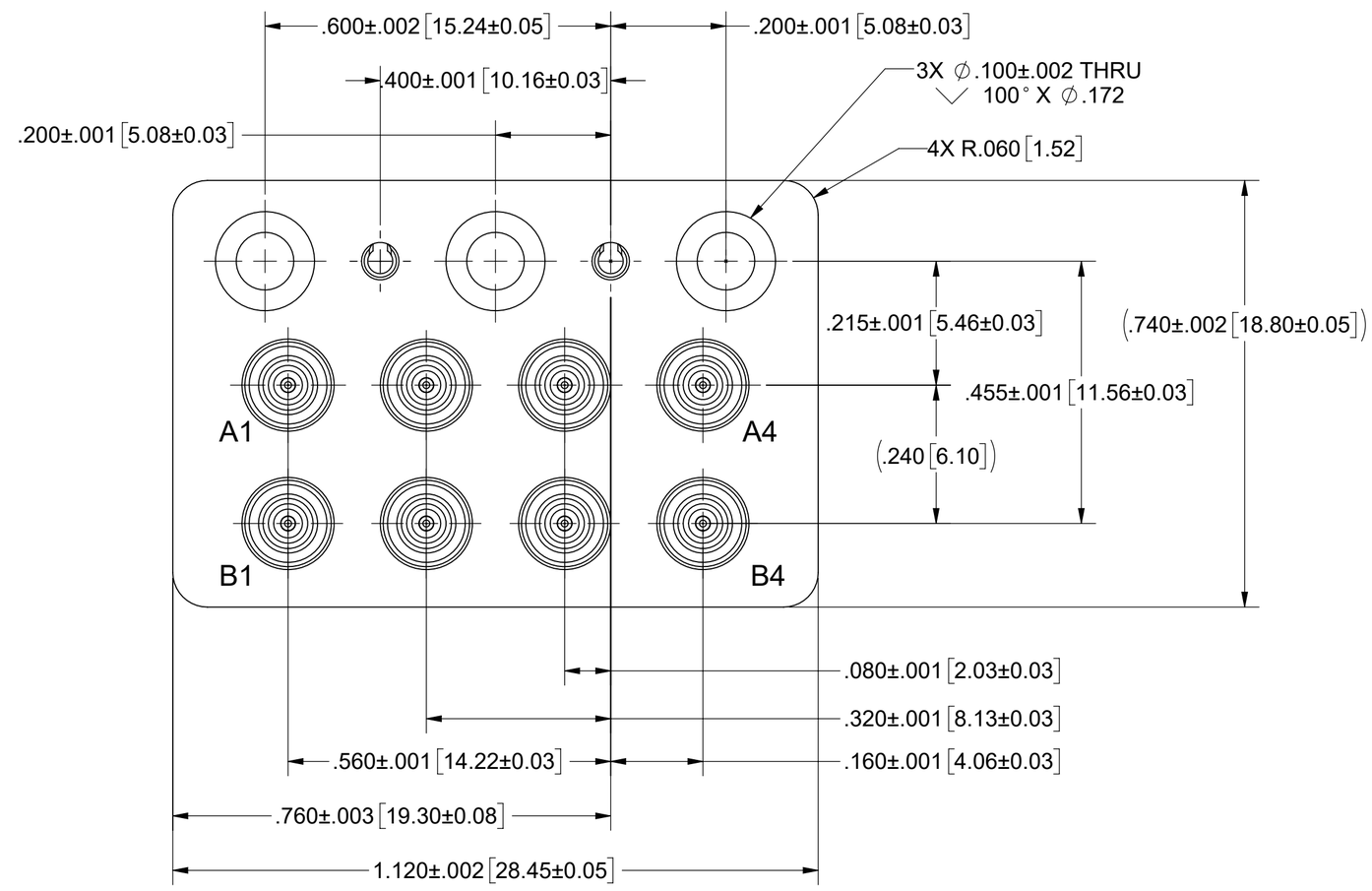

MATERIAL:

FLANGE: STAINLESS STEEL PER AMS-5640, ALLOY UNS S30300, TYPE 1.

SPRING PINS: STAINLESS STEEL PER ASTM A313, ALLOY UNS S30200, TYPE 302.

CONTACTS & SMPM BODIES: BERYLLIUM COPPER PER ASTM B196, ALLOY No. UNS C17300, TD04.

INSULATORS: PTFE PER ASTM D1710, TYPE I, GRADE 1, CLASS B.

FINISH:

FLANGE: PASSIVATED PER AMS-2700.

CONTACTS & SMPM BODIES: GOLD PER ASTM B488, TYPE II, CODE C, CLASS 1.27, OVER NICKEL PER AMS-QQ-N-290, CLASS 1, .00005" MIN.

PERFORMANCE:

IMPEDANCE: 50 OHMS
FREQ. RANGE: DC TO 26.5 GHz
VSWR: 1.50:1, MATED PAIR, DC TO 26.5 GHz
INSERTION LOSS: .12 X SQRT(F(F IN GHz))
DWV: 1000 VRMS
OPERATING TEMP.: -55°C TO +125°C

MATERIAL: SEE NOTES
FINISH: SEE NOTES

DO NOT SCALE DRAWING

PROPRIETARY

THE INFORMATION CONTAINED IN THIS DRAWING IS THE SOLE PROPERTY OF SV MICROWAVE, INC. ANY REPRODUCTION IN PART OR AS A WHOLE WITHOUT THE WRITTEN PERMISSION OF SV MICROWAVE, INC. IS PROHIBITED.

DIMENSIONS ARE IN INCHES
TOLERANCES:
ANGULAR: ±1°
ONE PLACE DECIMAL ±.030
TWO PLACE DECIMAL ±.010
THREE PLACE DECIMAL ±.005

INTERPRET DIMENSIONS AND TOLERANCES PER ASME Y14.5M - 1994

THIRD ANGLE PROJECTION

UNLESS OTHERWISE SPECIFIED:
1. ALL DIMENSIONS ARE AFTER PLATING.
2. BREAK CORNERS & EDGES R.005 MAX.
3. CHAMFER 1ST AND LAST THREAD.
4. SURFACE ROUGHNESS 63 PER MIL-STD-10.
5. DIA'S ON COMMON CENTERS TO BE CONCENTRIC WITHIN .005 T.I.R.
6. REMOVE ALL BURRS.

DRAWN: JMC 02/09/11
CHECKED: SEE PDM
APPROVED: SEE PDM
E.M. SIMULATION: N/A

Amphenol SV MICROWAVE
www.svmicrowave.com

TITLE: MULTIPORT ADAPTOR MODULE 8 POS

SIZE C DWG. NO. SF1132-6036.PDD

SCALE: 5:1 SHEET 1 OF 1